TUNGSRAM™

European Producer
Lighting Solutions

Outdoor

Product catalogue

2019

Innovation is our heritage
EST.1896

tungsram.com

Joerg Bauer
President & Chief Executive Officer

Dear Partner,

Welcome to Tungsram and a bright future for our respective businesses.

With a history that stretches back to 1896, the Tungsram name has always been highly respected. This heritage has now entered an exciting new phase following our acquisition of GE Lighting's Europe, Middle East, Africa and Turkey operation, together with GE's Global Automotive Lighting business.

So what does this mean for you, our valued partners? I firmly believe that the revival of the Tungsram brand represents a major opportunity for all of us, a chance to move forward with confidence and increase our share of national and international markets.

We will of course continue to offer a comprehensive range of market-leading lighting solutions, from traditional technologies such as HID, LFL, CFL, Halogen and Specialty lamps, to ultra-efficient, high performance indoor and outdoor LED solutions. Our renowned automotive lighting ranges include basic and premium lamps for original equipment and aftermarket, and we supply products for all major auto brands.

Our new company will drive forward the design and development of all kinds of light sources, from traditional technologies to state-of-the-art LED products, and will secure our position as a global force in lighting solutions.

In addition, we will work towards ever more efficient and advanced solutions in areas such as human centric light, energy optimisation and system intelligence.

Tungsram was the most innovative Hungarian industrial company of the last century and, by applying this attitude to a 21st century business, we will deliver the solutions, products and services that your customers are looking for.

These are exciting times for Tungsram. We are committed to enhancing the support we offer our partners – following the principle of "What can we do for your success?" – and we look forward to continuing our journey together.

Thank you.
Joerg

Join us in the new world of LED

LED Outdoor solutions deliver a light closer to natural daylight than the traditional lamps of the past. The latest LED lighting solutions provide an ideal upgrade path for public bodies looking to reduce energy costs and environmental impact. LED can make striking aesthetic improvements to landscapes and cityscapes.

The benefits of LED

- Increased sense of comfort and security
- Streets and car parks are better illuminated
- Enhanced CCTV through better facial recognition
- Improved road safety - faster responses
- Up to 70% higher energy efficiency
- Longer life and reduced maintenance
- Enhanced control/ dimming capabilities
- Colours are more vivid and more real in public areas
- Better light control, less light pollution

12 Road& street lighting
14 Spinella
18 SLBt
22 SMBt
26 SMIx
30 Odyssey LED

34 Decorative & pedestrian lighting
36 Navona

40 Canopy & Area lighting
42 ALIx
46 AHIx
50 AMIx

54 Tunnel lighting
56 TLBt
56 TMBt

www.tungsram.com

DIALux

Lighting Designer software

Dialux

Offline plugin

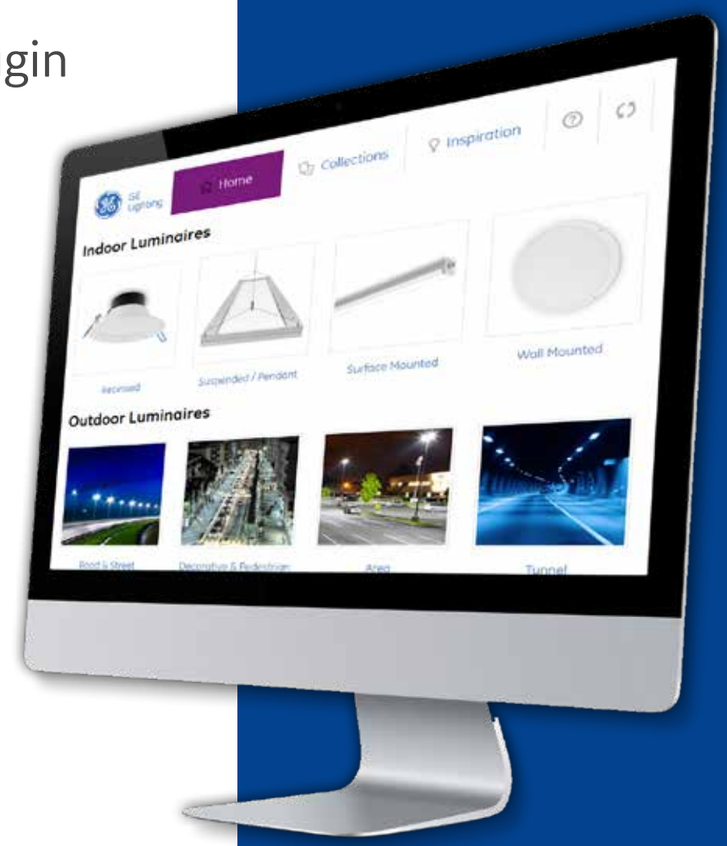

You can carry out simple and professional light planning by using the Dialux plug-in. Save time through a new user experience. The plugin is filled with plenty of additional solutions like customizable collections, inspirational materials and a completely up-to-date product catalogue.

Key plug-in features

- Fast and efficient
- Up to date product info
- Custom collection
- Inspiration material
- New interface
- Industry relevant news

With the plugin you will have the chance to find the products you need quickly and create a digital design of your ideas with Dialux. It's simple and efficient – just like the professional lighting solutions.

What are the benefits of Dialux?

- Simple, effective and professional light planning
- Latest "state of the art" software, always available free of charge
- Fits perfectly into designers' existing workflow.
- Energy evaluation is simple and quick
- Colored light scenes with LED or other luminaires

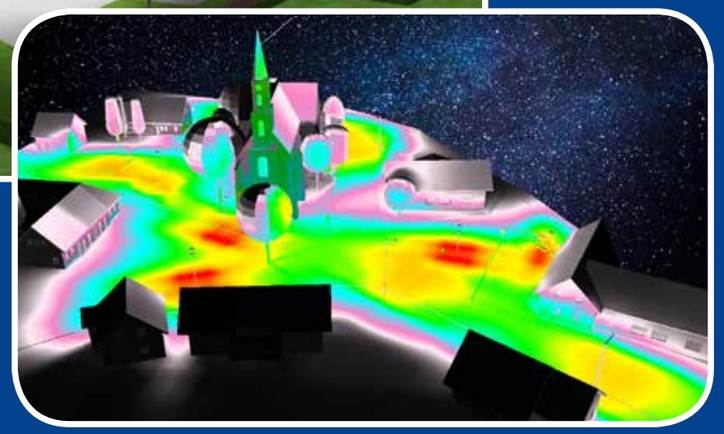

You can find all our indoor and outdoor luminaires and the related technical files in our eCatalogue as part of our website – **www.tungsram.com** .

Outdoor lighting

Product overview

Whether it's traffic on the road or people on footpaths, in public areas or visiting shops and restaurants, effective outdoor lighting means greater visibility, which in turn helps to maximise public safety and sense of security, and breathe new life back into cities. Outdoor lighting has other benefits too, including the delivery of dramatic aesthetic benefits and a major savings in energy costs.

We have pioneered the development of efficient LED luminaires that have transformed the outdoor environment and enhanced the night time experience for millions.

The LED lighting is used everywhere from residential streets to highways, creating a bright white light that improves safety through improved visibility, while also reducing energy consumption and associated costs.

High performance area lighting is designed to ensure that the light is aimed directly where it's needed while also delivering optimum performance in terms of luminance, uniformity and glare.

LED tunnel lighting fixtures combine excellent light quality with high levels of energy efficiency and reliability to deliver a safe and easy-to-maintain solution for tunnels, underpasses and industrial areas.

Outdoor lighting

Lumen output characteristics

M3 to M6 and C Classes for road and street lighting. Mounting above 6m.

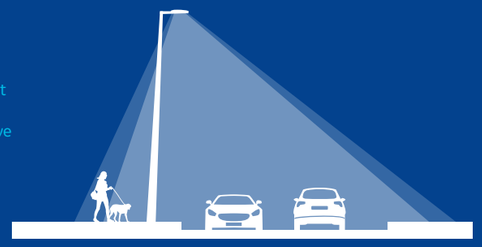

M3 to M6 and C Classes for road and street lighting. Mounting above 6m.

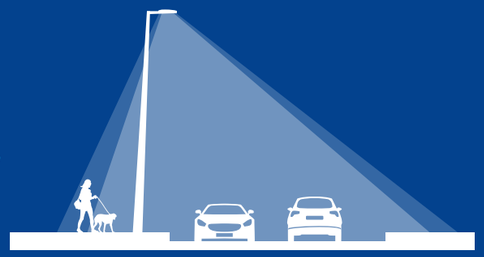

For C, P and S Classes, wide residential street lighting for improved face recognition and safety. Mounting below 4m.

For C Classes - Pedestrian crosswalks, P Classes improved backlight for sidewalks Mounting above 6m.

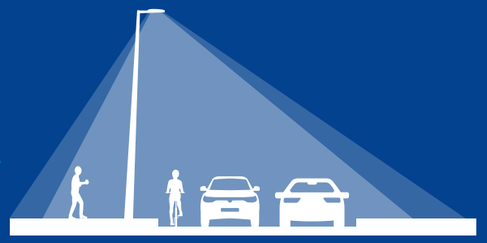

Light distributions and optics

AAA, ABA, ACA

BBB, BAB, BCB

CCC, CAC, CBC

B, B2, B5, R, S

C, C5

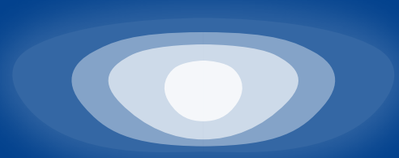

E, E2, E5

D

F

G2, F5

P5

X5

Z5

Outdoor lighting

Lumen output characteristics

Light distributions and optics

For Wet Road Classes - Pedestrian sidewalks, parking lanes. Mounting above 6m.

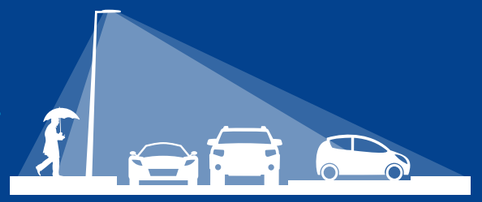

N, T

U

P

Asymmetrical distribution for P Classes - Area, Square and Park lighting. Mounting below 6m.

AF

ANC, AN

AFC, AWC, AW

Symmetrical distribution for P Classes - Area, Square and Park lighting. Mounting below 6m.

AWD, SWD, SWF

SFC, SWC

Symmetrical and asymmetrical distributions for Canopy lighting. Mounting 4-6m.

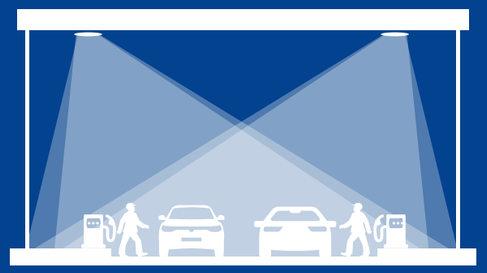

A25, A35, A55

S25, S35, S55

Symmetrical distributions for Tunnel lighting.

SA, SB, SC, SD, SE

Y5

Outdoor lighting

Product overview

Road & street lighting

Spinella

Wattage (W):	50 - 235
CCT (K):	3000, 4000, 5000
Lumen (lm):	5 920 - 26 400
IP:	IP66
IK:	IK09

SLBt

Wattage (W):	15 - 70
CCT (K):	3000, 4000
Lumen (lm):	1 480 - 8 360
IP:	IP66
IK:	IK09

SMBt

Wattage (W):	50 - 160
CCT (K):	3000, 4000
Lumen (lm):	6 440 - 18 760
IP:	IP66
IK:	IK09

SMIx

Wattage (W):	35 - 160
CCT (K):	3000, 4000, 5000
Lumen (lm):	5 310 - 21 980
IP:	IP66
IK:	IK08

Odyssey LED

Wattage (W):	15 - 105
CCT (K):	3000,4000
Lumen (lm):	1 720 - 9 980
IP:	IP66
IK:	IK09

Decorative & pedestrian lighting

Navona

Wattage (W):	16 - 72
CCT (K):	3000, 4000
Lumen (lm):	1 160 - 7 430
IP:	IP66
IK:	IK08

Canopy & Area lighting

ALIx

Wattage (W):	32 - 140
CCT (K):	3000, 4000, 5000
Lumen (lm):	3 650 - 18 010
IP:	IP66
IK:	IK08

AHIx

Wattage (W):	200 - 300
CCT (K):	4000, 5000
Lumen (lm):	21 000 - 37 600
IP:	IP66
IK:	IK08

AMIx

Wattage (W):	40 - 160
CCT (K):	4000, 5000
Lumen (lm):	4 670 - 18 830
IP:	IP65
IK:	IK08

Tunnel lighting

TLBt

Wattage (W):	32- 90
CCT (K):	4000
Lumen (lm):	3 800 - 9 990
IP:	IP66
IK:	IK08

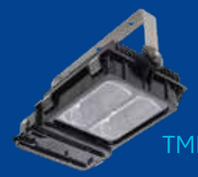

TMBt

Wattage (W):	130 - 150
CCT (K):	4000
Lumen (lm):	14 510 - 17 460
IP:	IP66
IK:	IK08

Road & street lighting

Road and street lighting

Spinella

Product information

Introducing Spinella, single and multiple module roadway fixtures. From residential streets to highways, the Spinella fixture is changing the way you light your roads. Developed and produced in EMEA, balances the technical needs of a sophisticated LED system with the functional demands of a reliable outdoor fixture for all weather conditions, while offering a platform for controls and intelligence.

Application areas

Residential

Road and street
Motorways

Details

Spinella

Performance

Single module

- Rated luminous flux:
  from 5 920 lm to 12 720 lm at 5000K
- Rated luminaire efficacy:
  up to 123 lm/W at 5000K
- Photometric code: 730/559, 740/559, 750/559
- Lumen maintenance code: 9
- Rated ambient temperature (tq) related to performance for a luminaire 25°C*
- Rated median useful life and the associated rated LM factor: L80B50 >128.000 hours (for P≤100W)
- Rated abrupt failure value*: 11.14%**

Multiple module

- Rated luminous flux:
  from 7 320 lm to 26 400 lm
- Rated luminaire efficacy: up to 121 lm/W
- Lumen maintenance code: 9
- Photometric code: 730/559, 740/559, 750/559
- Rated ambient temperature (tq) related to performance for a luminaire 25°C*
- Rated median useful life and the associated rated LM factor:L80B50 > 195.000 hours
- Rated abrupt failure value*: 5.59 %**

* Definitions and tolerances according to IEC 62722-2-1.
**Rated abrupt failure value depends on the configuration type.

Installation and maintenance

Mounting options

- Side mount ø55mm-60mm
- Post top ø55mm-76mm
- Coupler can be adjusted to -15°, -10°, -5°, 0°, +5°, +10° and +15° by 5°degree steps.
- Weight: 10,5kg (Single), 20,5kg (Multiple)
- Recommended mounting height: 6-12m (Single), 6-15m (Multiple)
- Only two hand-tools required for installing the fixture. Storage temperature up to 85°C.
- Ambient temperature from -30°C to 50°C.
- All materials used in this product are WEEE and ROHS compatible.

Optics

Available photometric distributions:

- Narrow Asymmetric – medium (B)
- Asymmetric – short (C)
- Asymmetric – medium (E)
- Forward asymmetric – medium (F)
- Narrow asymmetric – short (N)
- Narrow asymmetric with backlight – short (P)
- Narrow asymmetric – medium (R)
- Narrow asymmetric – medium (S)
- Asymmetric – short (T)
- Asymmetric – medium (U)

Rated colour rendering index: >70 at 4000K
Rated correlated colour temperatures*: 3000K, 4000K,5000K
S/P rating for : 3000K: 1.24, 4000K: 1.47, 5000K:1.71
ULOR (Upward Light Output Ratio): 0

Rated initial chromaticity co-ordinate values

CIE(x=0.43, y=0.403) 5SDCM
CIE(x= 0.38, y= 0.38) 5SDCM
CIE(x= 0.34, y= 0.35) 5SDCM

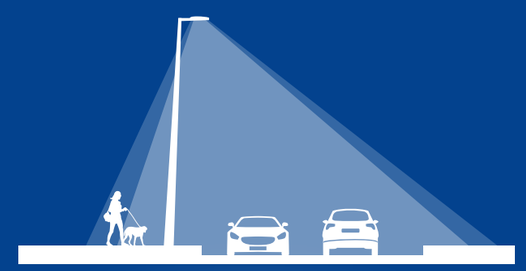

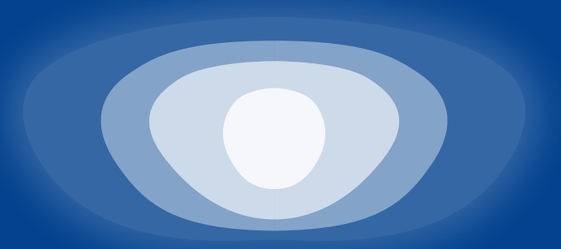

Asymmetric medium

Electrical

Input voltage and frequency: 220-240V, 50-60Hz
Class I: standard, Class II: on request
Surge protection: minimum 4kV/4kA
Rated input power: 52W to 230W
Power factor: >0.9

Dimensions (mm)

Single module

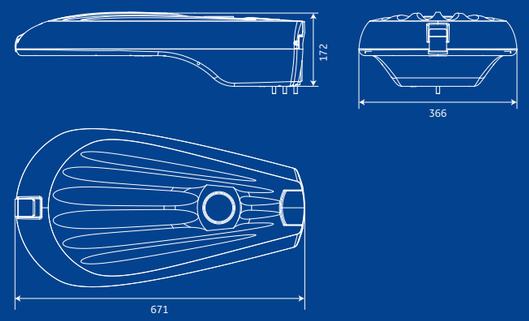

Multiple module

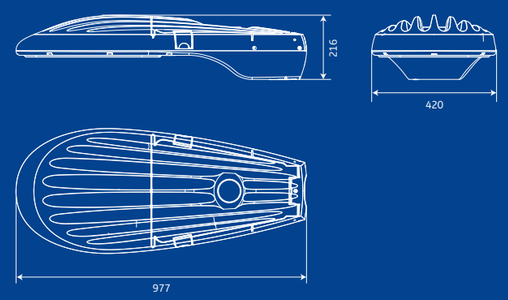

Road and street lighting

SLBt

Product information

Introducing our latest LED road and street fixture, the SLBt, which makes the advantages of outdoor LED lighting available for everyone, even those on tight budgets. Designed to replace 35-100W HID and 24-36W CFL fixtures, the SLBt is a great LED solution for minor roads, residential streets and other public spaces where modest levels of illumination is required.

Application areas

- Residental
- Road and street
  Motorways
- Car park

Details

SLBt

Driver feature

- Electronic, dimmable DALI driver with autonomous dimming: 15-72W.
- Constant Light Output (optional)

Structures and materials

- Housing material: die-cast aluminium body, corrosion resistant screws and brackets
- Optic material: coated polycarbonate or aluminium
- Colour: RAL7035
- Optical cover: UV stabilized polycarbonate
- All materials used in this product are WEEE and ROHS compatible.

Performance

- Rated luminous flux range: from 1 480 to 8 360 lm at 4000K
- Rated luminaire efficacy: up to 122 lm/W at 4000K.
- Photometric code: 730/559, 740/559
- Rated median useful life and the associated rated LM factor L80B50: > 195.000 hours
- Rated abrupt failure value: 11.5 %
- Lumen maintenance code: 9
- Rated ambient temperature (tq) related to Performance for a luminaire: 25°C

* Definitions and tolerances according to IEC 62722-2-1.
**Rated abrupt failure value depends on the configuration type.

Installation and maintenance

Mounting options

- Side mount bracket ø42mm-60mm
- Post top bracket ø48mm-76mm
- Universal coupler side ø35mm-76mm
- Universal coupler post ø35mm-76mm
- Bracket can be adjusted: 0°, +5° (with accessories -5° also available)
- Universal Coupler can be adjusted -15°,-10°, -5°, 0°, +5°, +10°, +15° by 5°degree steps
- Recommended mounting height: 4-15m
- Weight: 5 kg
- Only two hand-tools required for installing the fixture
- Storage temperature up to 85°C.
- Ambient temperature from -40°C to 35°C

Optics

Available photometric distributions:

- Narrow Asymmetric – medium (B, B2, B5)
- Asymmetric – short (C, C5)
- Asymmetric forward – very short (D)
- Asymmetric – medium (E, E2, E5)
- Forward asymmetric – medium (F, F5, G2)
- Narrow asymmetric – short (N)
- Narrow asymmetric with backlight – short (P, P5)
- Narrow asymmetric – medium (R)
- Narrow asymmetric – medium (S)
- Asymmetric – short (T)
- Asymmetric – medium (U)
- Pedestrian cross walk (X5, Z5)
- Symmetric – medium (Y5)

Rated colour rendering index:>70
Rated correlated colour temperatures*: 3000K, 4000K
S/P rating for : 3000K: 1.33, 4000K: 1.56
ULOR (Upward Light Output Ratio): 0

Rated initial chromaticity co-ordinate values

- CIE(x=0.43, y=0.403) 5SDCM
- CIE(x= 0.38, y= 0.38) 5SDCM

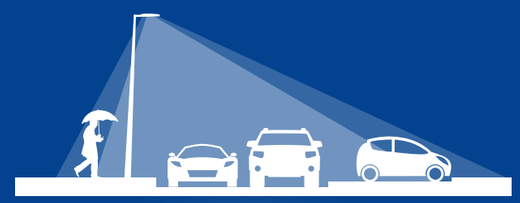

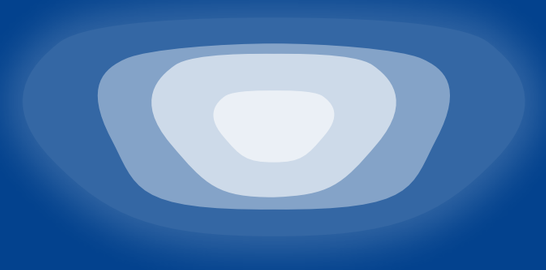

Asymmetric – short

Electrical

Input voltage and frequency: 220-240V, 50-60Hz
Class I: standard, Class II: on request
Surge protection: minimum 6kV/3kA
Rated input power: 14W to 70W

Dimensions (mm)

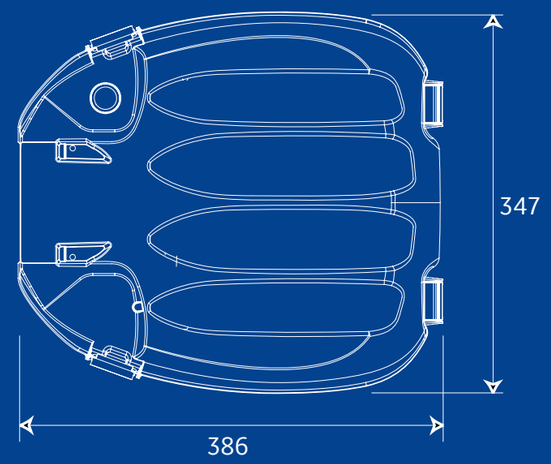

Road and street lighting

SMBt

Product information

Our LED roadway lighting fixture makes all the advantages of LED lighting available for a wide audience. Designed to replace 35-150W HID fixtures, SMBt is a great LED solution for minor roads, residential streets and other public spaces where modest level of illumination is required.

Application areas

- Residental
- Road and street
  Motorways
- Car park

Details

SMBt

Driver feature

- Electronic, dimmable (DALI) driver with autonomous dimming: 50W-160W
- Minimum dimming level 20W
- • Constant Light Output (optional)

Structures and materials

- Housing material: die-cast aluminium body, corrosion resistant screws and brackets
- Optic material: coated polycarbonate or aluminium
- Optical cover: glass
- Colour: RAL7035
- All materials used in this product are WEEE and ROHS compatible.

Performance

- Rated luminous flux range: from 6 440 to 18 760 lm at 4000K
- Rated luminaire efficacy: Up to 146 lm/W at 4000K.
- Photometric code: 730/559, 740/559
- Rated median useful life and the associated rated LM factor L80B50: > 102.000 hours
- Rated abrupt failure value: 11.5 %
- Lumen maintenance code: 9
- Rated ambient temperature (tq) related to performance for a luminaire: 25°C

* Definitions and tolerances according to IEC 62722-2-1.
**Rated abrupt failure value depends on the configuration type.

Installation and maintenance

Mounting options

- Side mount bracket ø42mm-60mm
- Post top bracket ø42mm-76mm
- Universal coupler side ø35mm-76mm
- Universal coupler post ø35mm-76mm
- Bracket can be adjusted: -5°, 0°, +5°
- Universal Coupler can be adjusted -15°,-10°, -5°, 0°, +5°, +10°, +15° by 5°degree steps
- Weight: 7,5 kg
- Storage temperature up to 85°C.
- Ambient temperature from -40°C to
  +50°C up to 140W
  +40°C up to 160W

Optics

Available photometric distributions:

- Narrow Asymmetric – medium (B, B2, B5)
- Asymmetric – short (C, C5)
- Asymmetric forward – very short (D)
- Asymmetric – medium (E, E2, E5)
- Forward asymmetric – medium (F, F5)
- Narrow asymmetric – short (N)
- Narrow asymmetric with backlight – short (P, P5)
- Asymmetric – short (T)
- Pedestrian cross walk (X5, Z5)
- Symmetric - (Y5)
- Asymmetric – medium (U)

Rated colour rendering index:>70
Rated correlated colour temperatures: 3000K, 4000K
S/P rating for : 3000K: 1.33, 4000K: 1.56
ULOR (Upward Light Output Ratio): 0

Rated initial chromaticity co-ordinate values

- CIE(x=0.43, y=0.403) 5SDCM
- CIE(x= 0.38, y= 0.38) 5SDCM

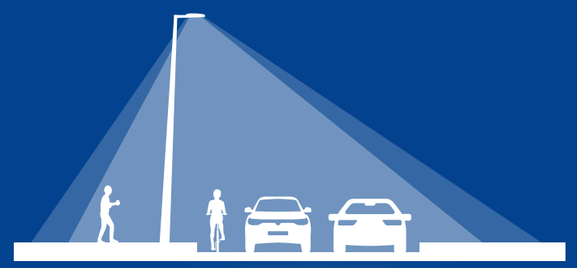

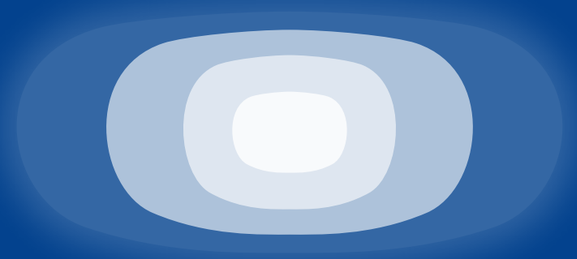

Narrow Asymmetric – medium

Electrical

Input voltage and frequency: 220-240V, 50-60Hz
Class I: standard, Class II: on request
Surge protection: minimum 6kV/3kA
Rated input power: 52W to 158W

Dimensions (mm)

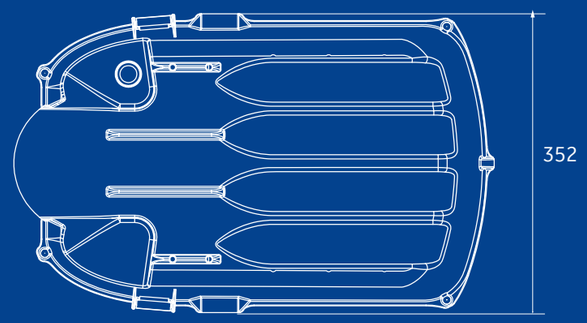

Road and street lighting

SMIx

Product information

SMIx offers an optimal solution for street lighting. Modular refractive optic system, a wide range of light distributions can be achieved. The optimized mechanical design provides simple installation, adjustability and reliability.

Application areas

Residental

Road and street
Motorways

Details

SMIx

Driver feature

- Electronic, dimmable (DALI) driver with autonomous dimming: 35-160W

Structures and materials

- Housing material: die-cast aluminium body and UV stable plastic door with corrosion resistant polyesther powder coat, stainless steel screws and brackets
- Optic material: Optical-grade polycarbonate
- Optical cover: Tempered glass
- Colour: RAL7035
- Impact Strength: IK08 on optical parts, IK09 on housing and coupler
- All materials used in this product are WEEE and ROHS compatible.

Performance

- Rated luminous flux range: from 5 310 to 21 980 lm
- Rated luminaire efficacy: Up to 152 lm/W at 4000K
- Rated median useful life and the associated rated LM factor L80B50: > 100.000 hours
- Rated abrupt failure value: 3.12 %*
- Photometric code: 730/559, 740/559, 750/559
- Lumen maintenance code: 9
- Rated ambient temperature (tq) related to performance for a luminaire: 25°C

* Definitions and tolerances according to IEC 62722-2-1.
**Rated abrupt failure value depends on the configuration type.

Installation and maintenance

Mounting options

- Side-mounting coupler for 30-60mm diameters and -15°, -10°, -5°, 0° tilt options
- Post top mounting coupler for 30-60mm diameters and 15°, 10°, 5°, 0° tilt options
- Weight: 8 kg
- Recommended mounting height: 4 - 15m
- Only two hand-tools required for installing the fixture
- Storage temperature up to 85°C.
- Ambient temperature from -40°C to 50°C

Optics

Available photometric distributions:

- E: optimized for narrow P type roads
- F: optimized for wide P class roads
- C: optimized for high traffic M class roads

Rated colour rendering index >70
Rated correlated colour temperatures: 3000K, 4000K, 5000K
S/P rating for : 3000K: 1.24, 4000K: 1.47, 5000K:1.71
ULOR (Upward Light Output Ratio): 0

Rated initial chromaticity co-ordinate values

- CIE(x=0.43, y=0.403) 5SDCM
- CIE(x= 0.38, y= 0.38) 5SDCM
- CIE(x= 0.34, y= 0.35) 5SDCM

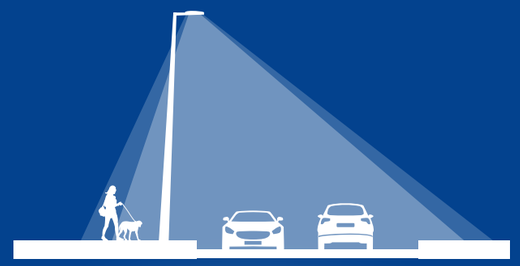

Optimized for high traffic ME class roads

Electrical

Input voltage and frequency: 220-240V, 50-60Hz
Class I: standard
Surge protection: minimum 6kV/3kA
Rated input power: 35W to 160W

Dimensions (mm)

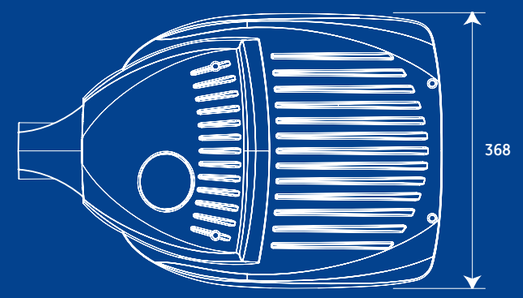

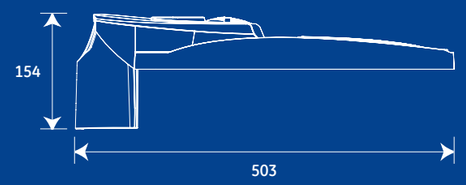

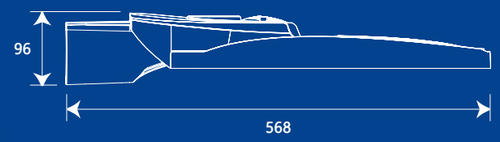

Road and street lighting

Odyssey LED

Product information

The Odyssey LED luminaire is a controllable road lighting fitting which is available with different system consumptions up to 100 Watts. It is ideal for efficient lighting of street and roadway applications, walkways, parks & gardens up to 15m high. The advanced LED optical system used in this fixture has improved horizontal and vertical uniformity, reduced glare and improved lighting controls.

Application areas

- Residental
- Road and street
  Motorways
- Car park

Details

Odyssey LED

Driver feature

- Electronic, dimmable (DALI) drivers with ClockDIM (C) 17-50W and DynaDIM autonom dimming (Y) 60-103W.
- Minimum dimming level 12W

Structures and materials

- Housing material: die-cast aluminium body, corrosion resistant screws and brackets
- Optic material: aluminium coated polycarbonate
- Optical cover: glass
- Colour: RAL7035
- All materials used in this product are WEEE and ROHS compatible.

Performance

- Rated luminous flux range: from 1 720 to 9 980 lm at 4000K
- Rated luminaire efficacy: Up to 125lm/W at 4000K.
- Photometric code: 730/559, 740/559, 750/559
- Rated median useful life and the associated rated LM factor L80B50: > 109.000 hours
- Rated abrupt failure value: 11.5 %
- Lumen maintenance code: 9
- Rated ambient temperature (tq) related to performance for a luminaire: 25°C

* Definitions and tolerances according to IEC 62722-2-1.
**Rated abrupt failure value depends on the configuration type.

Installation and maintenance

Mounting options

- Side mount ø30mm-60mm
- Post top ø30mm-76mm
- Coupler can be adjusted -15°,-10°, -5°, 0°, +5°,+10°, +15° by 5° degree steps
- Weight: 9.5kg
- Recommended mounting height: 4-12m
- Only two hand-tools required for installing the fixture.
- Storage temperature from -30°C to 85°C.
- Ambient temperature from -30°C to 50°C.

Optics

Available photometric distributions:

- Narrow Asymmetric – medium (B)
- Asymmetric – short (C)
- Asymmetric forward – very short (D)
- Asymmetric – medium (E)
- Forward asymmetric – medium (F)
- Narrow asymmetric – short (N)
- Narrow asymmetric with backlight – short (P)
- Narrow asymmetric – medium (R)
- Narrow asymmetric – medium (S)
- Asymmetric – short (T)
- Asymmetric – medium (U)

Rated colour rendering index:>70 at 4000K
Rated correlated colour temperatures: 3000K, 4000K,5000K
S/P rating for : 3000K: 1.24, 4000K: 1.47, 5000K:1.71
ULOR (Upward Light Output Ratio): 0

Rated initial chromaticity co-ordinate values

- CIE(x=0.43, y=0.403) 5SDCM
- CIE(x= 0.38, y= 0.38) 5SDCM
- CIE(x= 0.34, y= 0.35) 5SDCM

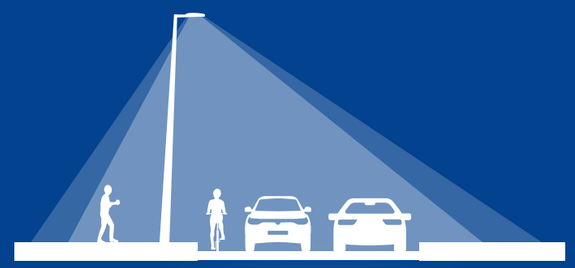

Narrow asymmetric with backlight – short

Electrical

Input voltage and frequency: 220-240V, 50-60Hz
Class I: standard, Class II: on request
Surge protection: minimum 6kV/3kA
Rated input power: 17W to 103W

Dimensions (mm)

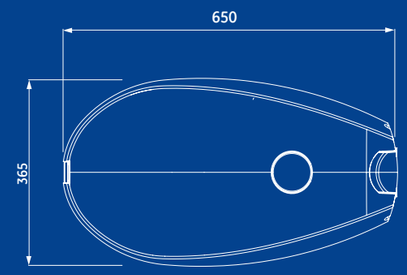

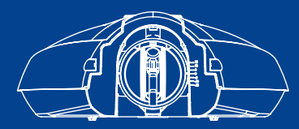

S76 ⌀ 55-76

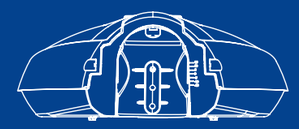

P76 ⌀ 55-76

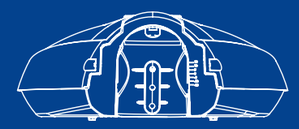

P50 ⌀ 42-50

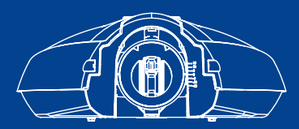

S50 ⌀ 42-50

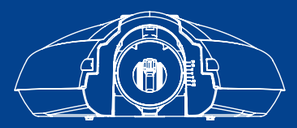

S35 ⌀ 30-35

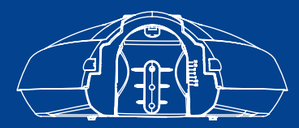

P35 ⌀ 30-35

Decorative & Pedestrian lighting

Decorative & Pedestrian lighting

Navona

Product information

Navona is a LED solution to replace traditional fixtures in parks, pedestrian areas, city centers. Timeless design incorporates the aesthetic necessities with the optimal optical distribution, providing several lumen packages with symmetrical and asymmetrical distribution and a power range from 16W to 72W to meet a wide range of lighting scenarios. Navona offers a major increase in both vertical and horizontal uniformity. Combined with the high chromatic reproduction contributed by LED technology (white light), this uniform quality facilitates face recognition and visual comfort. Its advanced optical design enables the light to be directed specifically where it is needed.

Application areas

- Residental
- City centres
  (road classifications: from P2 to P6)
- Parks

Details

Navona

Driver feature

- Electronic, programmable & dimmable (DALI and 0-10V**).
  Controllable driver with astronomical clock availability.
  Controls system inputs: Analog, DALI, Dynadim

** In case of 0-10V control please do not dimming below 40%.

Structures and materials

- Housing material: in three pieces (upper-housing, lowerhousing and arm with coupler), all made from die-cast aluminium with a polyester powder paint finish and oven cured.
- Surface finish: polyester powder coat
- Colour: RAL9007
- Optical cover:flat tempered glass
- All materials used in this product are WEEE and ROHS compatible.

Performance

- Rated luminous flux range: 1 160 to 7 430 lm
- Rated luminaire efficacy: Up to 109 lm/W
- Rated median useful life and the associated rated LM factor
  L80B50: > 200.000 hours
- Rated abrupt failure value: 13.2 %*
- Photometric code: 730/559, 740/559
- Lumen maintenance code: 9
- Rated ambient temperature (tq) related to performance for a luminaire: 25°C

* Definitions and tolerances according to IEC 62722-2-1.
** Rated abrupt failure value depends on the configuration type.

Installation and maintenance

Mounting options

- 1- and 2-arm through 42-48, 60, 76 mm standard post top mounting. Side mounting through 60 mm diameter pole.
- Weight: 11,2 kg
- Recommended mounting height: 4-6 m
- Ambient operating temperature: -30°C to 50°C
- Storage temperature: up to 85°C

Optics

Available photometric distributions:

- Asymmetric Forward Clear (AFC)
- Asymmetric Wide Clear (AWC)
- Asymmetric Narrow Clear (ANC)
- Asymmetric Wide Diffuser (AWD)
- Symmetric Wide Clear (SWC)
- Symmetric Wide Diffuser (SWD)
- Symmetric Forward Clear (SFC)

Rated colour rendering index >70
Rated correlated colour temperatures: 3000K, 4000K
ULOR (Upward Light Output Ratio): 0
S/P rating for : 3000K: 1.24, 4000K: 1.47

Rated initial chromaticity co-ordinate values

- CIE(x=0.43, y=0.403) 5SDCM
- CIE(x= 0.38, y= 0.38) 5SDCM

Symmetric Wide, Forward

Electrical

Input voltage and frequency: 220-240V, 50-60Hz
IEC Protection Class: Class I
Surge protection: 6kV standard / 10kV option available
Rated input power: 16W to 72W

Dimensions (mm)

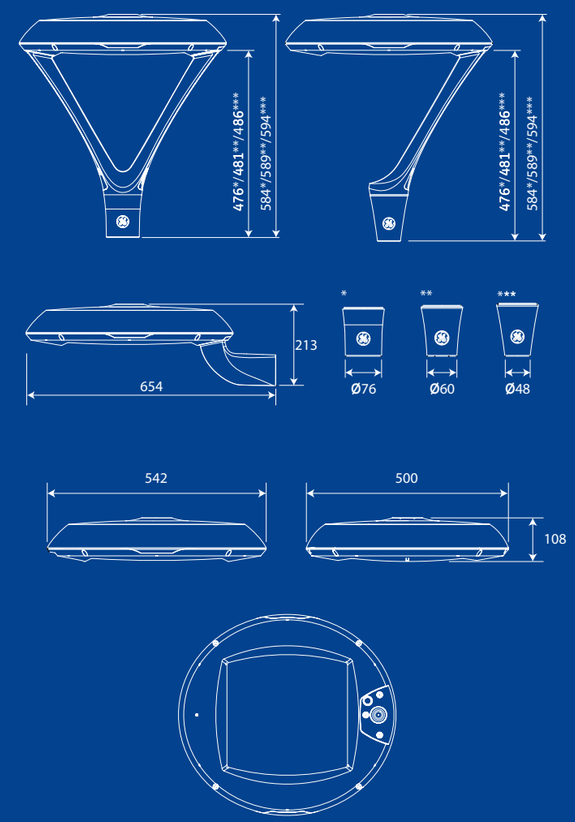

Canopy & Area lighting

Area lighting

ALIx

Product information

ALIx LED outdoor luminaire delivers outstanding features, style and attractive form factor. This latest design offers excellent efficacy even at higher lumen outputs to meet a wide range of area lighting needs.
Using reflective optic technology, GE offers superior horizontal and vertical illuminance with high uniformity, while minimizing glare. This system delivers unusually low perceived glare when viewed from beneath. ALIx provides reduced energy consumption, combined with a long rated life that virtually eliminates ongoing maintenance expenses, enabling significant operating cost benefits over the life of the fixture.

Application areas

- Car park
- Industrial & logistic
- Shopping centres
- Pedestrian crossings

Details

ALIx

Driver feature

- Electronic, dimmable (DALI) driver with autonomous dimming: 32-140W
- Minimum dimming level 15W
- DynaDimmer
- Constant Light Output

Structures and materials

- Housing material: die-cast aluminium body, corrosion resistant screws and brackets
- Optic material: highly reflective aluminium coated plastic
- Optical cover: tempered glass
- Colour: RAL9007
- All materials used in this product are WEEE and ROHS compatible.

Performance

- Rated luminous flux range: from 3 650 to 18 010 lm at 5000K
- Rated luminaire efficacy: Up to 140lm/W at 5000K.
- Photometric code: 730/559, 740/559, 750/559
- Rated median useful life and the associated rated LM factor L80B50 > 131000 hours
- Rated abrupt failure value: 2.5 %
- Lumen maintenance code: 9
- Rated ambient temperature (tq) related to performance for a luminaire: 25°C

* Definitions and tolerances according to IEC 62722-2-1.
**Rated abrupt failure value depends on the configuration type.

Installation and maintenance

Mounting options

- Coupler ø60mm for side-mount or post-top
- Adjustable bracket (between -85° and 85° from horizontal)
- Recommended mounting height: 8-15m
- Tool-less driver maintenance
- Storage temperature up to 85°C.
- Operating temperature from -40°C to 50°C

Optics

Available photometric distributions:

- Asymmetric Forward (AF)
- Asymmetric Wide (AW)
- Asymmetric Narrow (AN)
- Asymmetric Extra Wide Flood (AEF)
- Asymmetric Forward Throw Narrow* (AFN)
- Symmetrical Wide Flood (SWF)
- Symmetrical Narrow Spot (SNS)

*AFN optics only available with Powers 100W &140W

Rated colour rendering index:>70 at 4000K
Rated correlated colour temperatures: 3000K, 4000K,5000K
S/P rating for : 3000K: 1.24, 4000K: 1.47, 5000K:1.71
ULOR (Upward Light Output Ratio): 0

Rated initial chromaticity co-ordinate values

- CIE(x=0.43, y=0.403) 5SDCM
- CIE(x= 0.38, y= 0.38) 5SDCM
- CIE(x= 0.34, y= 0.35) 5SDCM

Asymmetric Narrow

Electrical

Input voltage and frequency: 220-240V, 50-60Hz
Class I, Class II
Surge protection: minimum 4kV/2kA
Rated input power: 31W to 142W

Dimensions (mm)

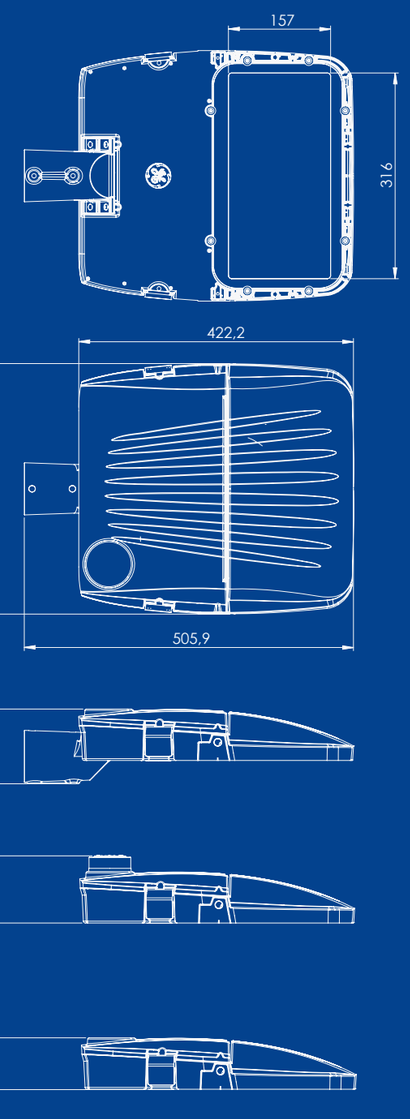

Area lighting

AHIx

Product information

AHIx luminaire offers an optimal LED lighting solution for high lumen package applications. Tried and tested reflective optic technology, combined with the effective thermal management, excellent light efficiency can be maintained throughout the whole lifetime of the luminaire, even under extreme thermal conditions. A wide range of different light distributions makes this luminaire versatile and flexible for numerous application areas. AHIx is a perfect choice for high power LED lighting applications where optical flexibility and reliability are critical.

Application areas

- Industrial & Maintenance
- Logistical areas: airports, ports, trains
- Car park
- Sport

Details

AHIx

Driver feature

- Electronic dimmable Dali driver
- Minimum dimming level: 30%

Structures and materials

- Housing material: die-cast and sheet metal aluminium body,stainless steel screws and brackets
- Surface finish: polyester powder coat
- Colour: RAL9007
- Optical cover: tempered low-iron glass
- All materials used in this product are WEEE and ROHS compatible.

Performance

- Rated luminous flux range: 21 000 to 37 600 lm at 5000K
- Rated luminaire efficacy: Up to 133lm/W
- Rated median useful life and the associated rated LM factor L80B50: > 110.000 hours
- Rated abrupt failure value: 3.12 %*
- Photometric code: 740/559, 750/559
- Lumen maintenance code: 9
- Rated ambient temperature (tq) related to performance for a luminaire: 25°C

* Definitions and tolerances according to IEC 62722-2-1.
**Rated abrupt failure value depends on the configuration type.

Installation and maintenance

Mounting options

- Adjustable stirrup
- Weight: 15kg
- Recommended mounting height: 10-40 m
- Ambient operating temperature: -40°C to 50°C
- Storage temperature: up to 85°C

Optics

Available photometric distributions:

- Asymmetric Forward (AF)
- Asymmetric Wide (AW)
- Asymmetric Narrow (AN)
- Asymmetric Extra Wide Flood (AEF)
- Asymmetric Forward Throw Narrow (AFN)
- Symmetric Wide Flood (SWF)
- Symmetric Narrow Spot (SNS)
- Symmetric Forward (SF)
- Symmetric Wide (SW)

Rated colour rendering index >70
Rated correlated colour temperatures: 4000K, 5000K
ULOR (Upward Light Output Ratio): 0

Rated initial chromaticity co-ordinate values

- CIE(x= 0.38, y= 0.38) 5SDCM
- CIE(x= 0.34, y= 0.35) 5SDCM

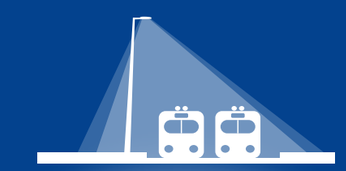

Asymmetric Wide

Asymmetric Forward

Electrical

Input voltage and frequency: 220-240V, 50-60Hz
IEC Protection Class: Class I
Surge protection: 6kV standard / 10kV option available
Rated input power: 200W to 300W

Dimensions (mm)

AHIx Remote Driver Luminiare
(RST and RSP Accessory Options)

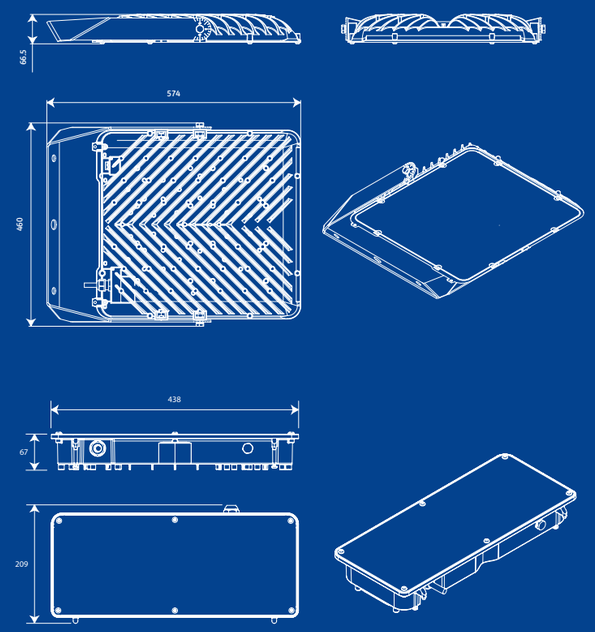

AHIx Integrated Luminiare
(ST and SP Accessory Options)

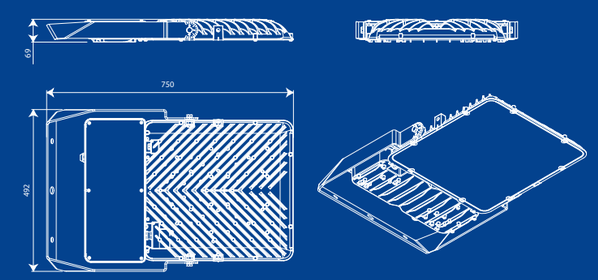

Canopy lighting

AMIx

Product information

AMIx is our latest LED canopy fixture, provides a flexible and rapid installation solution for petrol stations, high bays, parking garages, industrial and other lighting application areas. AMIx is ideally suited both for replacing traditional fixtures such as HID luminaires and for new installations.

Application areas

- Parking garages
- Petrol station
- Industrial High bay
- Floodlighting

Details

AMIx

Driver feature

- Electronic, dimmable driver
- 100W&150W with 0-10V or DALI control.

Structures and materials

- Housing material: die-cast and sheet metal aluminium body,stainless steel screws and brackets
- Surface finish: polyester powder coat
- Colour: RAL9003
- Optical cover: tempered low-iron glass
- All materials used in this product are WEEE and ROHS compatible.

Performance

- Rated luminous flux range: 4 670 to 18 830 lm
- Rated luminaire efficacy: Up to 134lm/W
- Rated median useful life and the associated rated LM factor
  L80B50: > 189.000 hours
- Rated abrupt failure value: 12.8 %*
- Photometric code: 740/559, 750/559
- Lumen maintenance code: 9
- Rated ambient temperature (tq) related to performance for a luminaire: 25°C

* Definitions and tolerances according to IEC 62722-2-1.
**Rated abrupt failure value depends on the configuration type.

Installation and maintenance

Mounting options

- Bezel, surface mount and flood
- Weight: 9kg
- Recommended mounting height: 4-6 m
- Ambient operating temperature: -40°C to 50°C
- Storage temperature: up to 85°C

Optics

Available photometric distributions:

- S25-symmetric 25°
- S35- symmetric 35°
- S55- symmetric 55°
- A25- asymmetric 25°
- A35- asymmetric 35°
- A55- asymmetric 55°

Rated colour rendering index >70
Rated correlated colour temperatures: 4000K, 5000K
S/P rating for : 4000K: 1.47, 5000K: 1.71
ULOR (Upward Light Output Ratio): 0

Rated initial chromaticity co-ordinate values

- CIE(x= 0.38, y= 0.38) 5SDCM
- CIE(x= 0.34, y= 0.35) 5SDCM

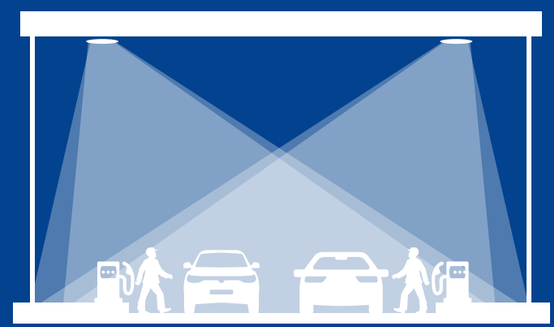

Asymmetric 55°

Electrical

Input voltage and frequency: 220-240V, 50-60Hz
IEC Protection Class: Class I
Surge protection: 4kV, 2kA
Rated input power: 39W to 156W

Dimensions (mm)

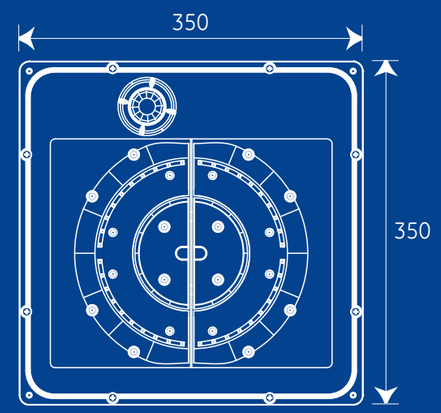

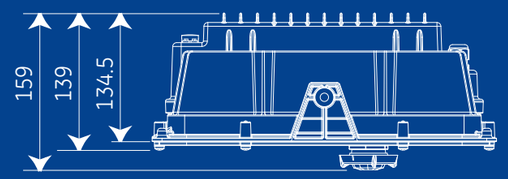

Tunnel lighting

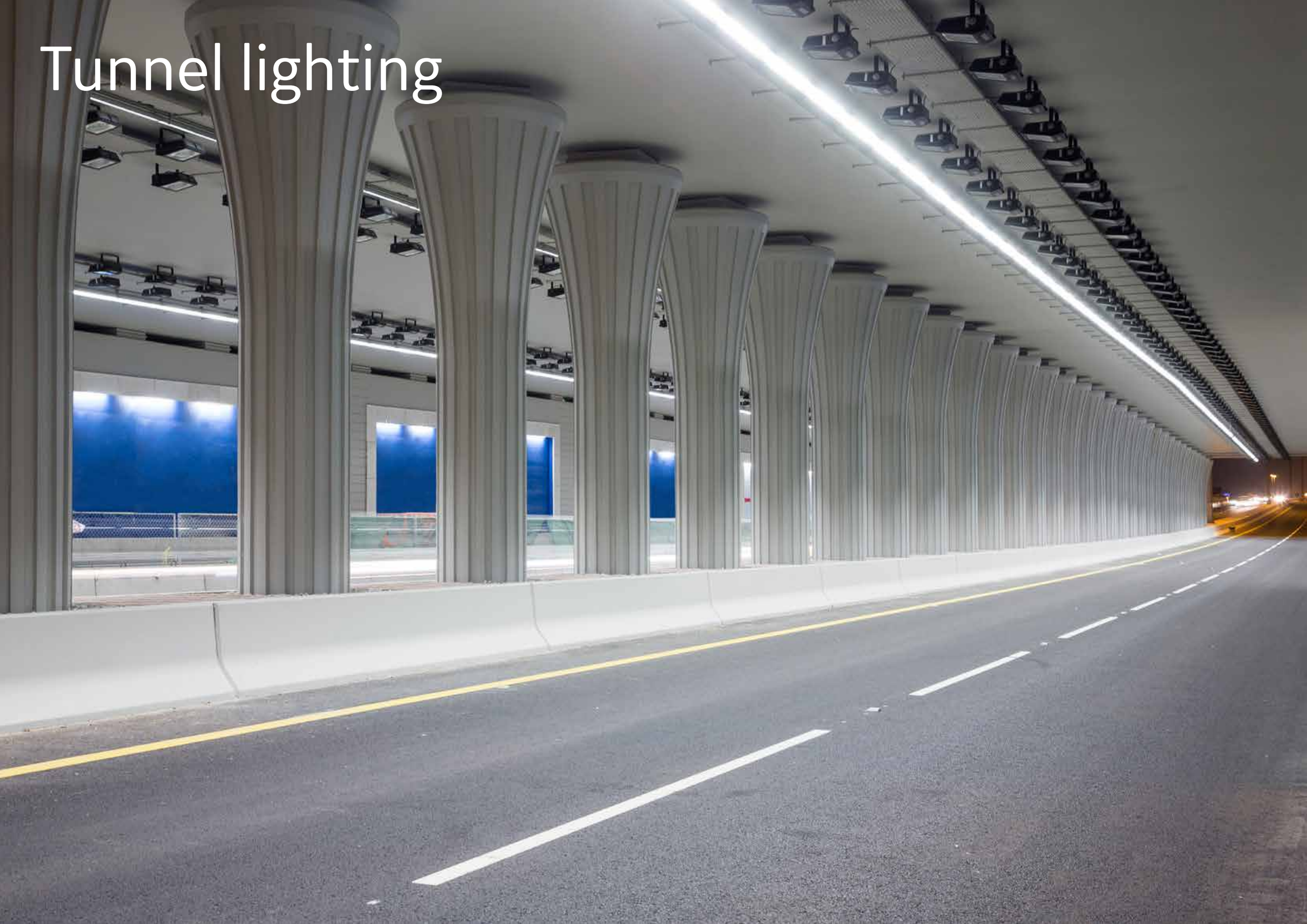

Tunnel lighting

TLBt & TMBt

Product information

TLBt & TMBt are specially designed for tunnel lighting and available in a wide range for low and high speed tunnels, underpasses and other applications.
Maintenance in a tunnel can cause a headache for the operators and for the users as well. The engineers therefore put major focus on developing a highly durable and reliable product with a long lifetime. The products provide easy and fast installation and maintenance to save time and cost. Safety is another important aspect in which lighting plays a key role. Our tunnel lighting solution can improve visibility for drivers with better light quality and as a result they can react faster to emergencies and other situations in tunnels.

Application areas

- Industrial
- Floodlight
- Underpasses

Details

TLBt & TMBt

Driver feature

- Electronic dimmable Dali driver
- Minimum dimming level: 30%

Structures and materials

- Housing material: die-cast aluminium
- Optical material: aluminised plastic
- Optical cover: tempered glass
- Colour: RAL9005
- All materials used in this product are WEEE and ROHS compatible.

Performance

- Rated luminous flux: from 3 800 to 9 990 lm (TLBt)
- Rated luminous flux: from 14 510 to 17 460 lm (TMBt)
- Rated luminaire efficacy: up to 120 lm/W
- Rated median useful life and the associated rated LM factor L80B50: > 193.000 hours
- Rated abrupt failure value: 3.12 %*
- Lumen maintenance code: 9
- Rated ambient temperature (tq) related to performance for a luminaire: 25°C

* Definitions and tolerances according to IEC 62722-2-1.
**Rated abrupt failure value depends on the configuration type.

Installation and maintenance

Mounting options

- Two types of fixing bracket are available: short arm for ceiling mounting, and long arm for wall mounting. Additional mounting solutions are available on request.
- Weight: 9 Kg
- Recommended mounting height: 4-8 m
  The LED light engine and driver are replaceable without the need of tools, enabling a quick and easy maintenance solution
- Recommended maintenance factor for lighting design: 0.8
- Ambient temperature from -40°C to 50°C
- Storage temperature up to 85°C

Optics

Available photometric distributions:

- Extra narrow Asymmetric – medium (A)
- Narrow Asymmetric – medium (B, AQ)
- Asymmetric – short (C)
- Asymmetric forward – very short (D)
- Asymmetric – medium (E)
- Extra narrow Symmetric – medium (SA)
- Narrow Symmetric – medium (SB)
- Symmetric – short (SC)
- Symmetric forward – very short (SD)
- Symmetric – medium (SE, Y)
- Rated colour rendering index:>70

Rated correlated colour temperatures: 4000K
S/P rating for 4000K: 1.56
ULOR (Upward Light Output Ratio): 0

Rated initial chromaticity co-ordinate values

- CIE(x= 0.38, y= 0.38) 5SDCM

Symmetric Medium

Electrical

Input voltage and frequency: 220-240V, 50-60Hz
Class I: standard
Surge protection: minimum 6kV/3kA
- Rated input power: from 32W to 89W(TLBt)
- Rated input power: from 130W to 151W (TMBt)

Dimensions (mm)

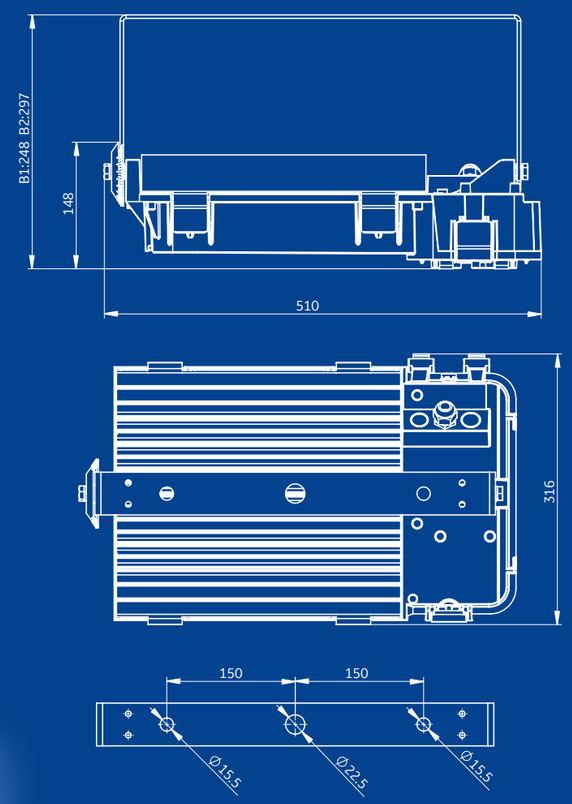

Tunnel lighting overview

What you need to know about tunnel lighting

Tunnel Lighting should provide the driver with the same safety and comfort as driving on an open road. There should be a smooth lighting transition from approaching, transiting and exiting the tunnel, to help the drivers see all obstacles in the environment and the behaviour of other road users.

Tunnel lighting

Good tunnel lighting takes care of good visibility conditions for the road users, this requires lighting levels that are matched with the adaptation level of the users' eyes. As this adaptation level gradually changes while travelling through the tunnel, for lighting purposes the tunnel can be divided lengthwise into five zones: the access, threshold, transition, interior and exit zone.
The decision whether a tunnel or underpass has to be lit during the day depends on

- the length of the tunnel
- the visibility of the exit
- the amount of natural light in the tunnel
- the traffic density.

The access zone

The access zone is not a part of the tunnel itself, but the approach road immediately before the tunnel entrance.
The drivers' vision will have to adapt to the conditions in the tunnel. It is very important that the drivers should be able to see any obstacles or any kind of danger even from this access zone, so that they can react on time.

The threshold zone

The required luminance level in the first section of the threshold zone of the tunnel, which length is equal to the safe stopping distance, will proportionally reduce the amount of light and energy needed. In the second half of the threshold zone the luminance level is decreased rapidly to 40 % of the initial level.

Transition zone

In the transition zone the lighting level is gradually reduced further. The reduction speed is related to the adaptation speed of the eyes but the steps of the reduction should not exceed a ratio of 3:1.

Interior zone

In the interior zone the required lighting levels are related to the structure and size of the tunnel, the speed of the traffic and the traffic density.

Exit zone

In the exit zone the tunnel lighting has to prepare the eye of the drivers for the outside conditions. Even though visual adaptation from low to high level takes place instantaneously, but there are other reasons for installing an increased lighting level in the exit zone:

- to make following cars more visible in the rear-view mirror of a car leaving the tunnel
- to prepare the driver in case of an emergency when exiting the tunnel.

Emergency lighting

Emergency lighting is usually part of the lighting system and guarantees minimal light when the power supply is interrupted.

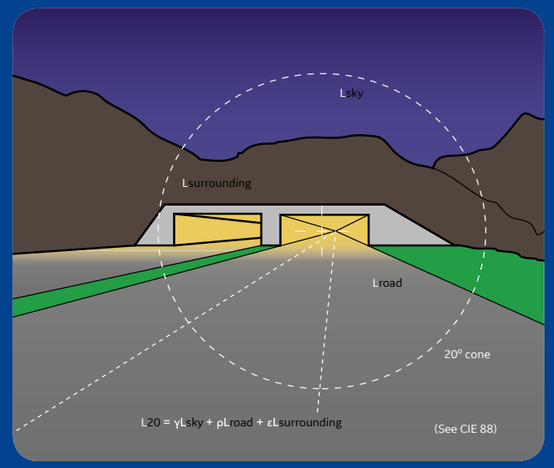

Recommended threshold/access zone luminance ratios		
Stopping distance (m)	Symmetrical lighting system Lth/ L20	Counter-beam lighting system Lth/ L20
60	0.05	0.04
100	0.06	0.05
160	0.10	0.07

Recommended interior zone luminances (cd/m2)			
Stopping distance (m)	Traffic density		
	<100 veh/h	100<veh/h<1000	>1000 veh/h
60	0.05		0.04
100	0.06		0.05
160	0.10		0.07

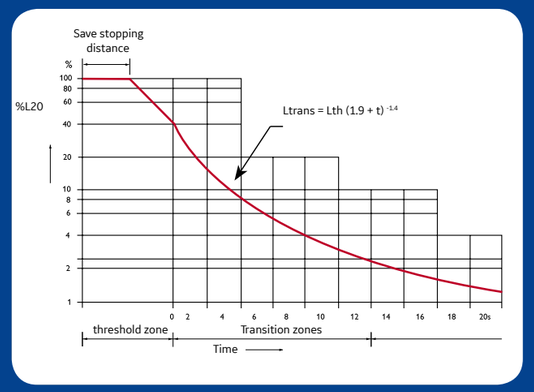

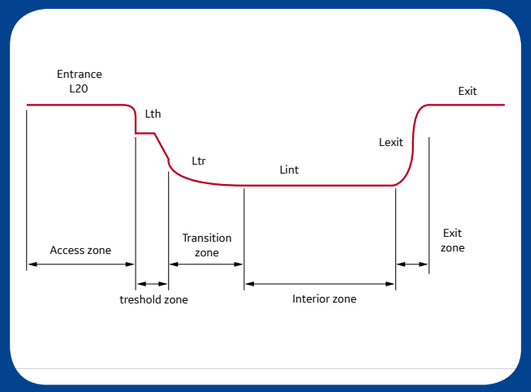

Reflective vs Refractive

Great utilisation factor

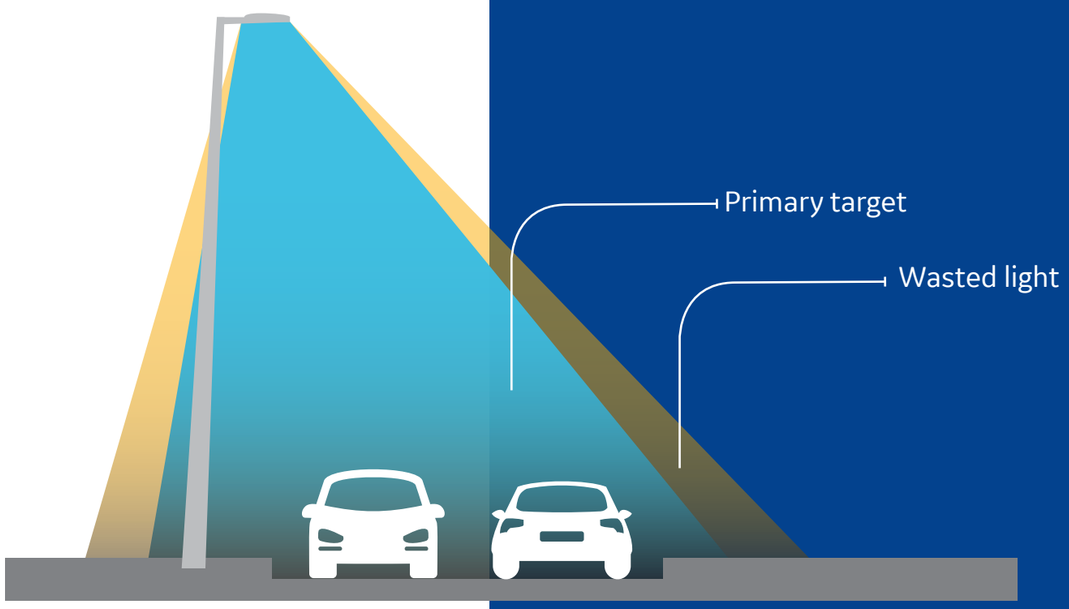

The perceived direct glare of refractive optics is greater than reflective optics.

Reflective Strengths

Application efficiency
Colour dispersion
Longevity

Refractive Strengths

Thermal behavior
Luminaire size

Like for like

Uniformity
Maintenance
Manufacturing

Reflective

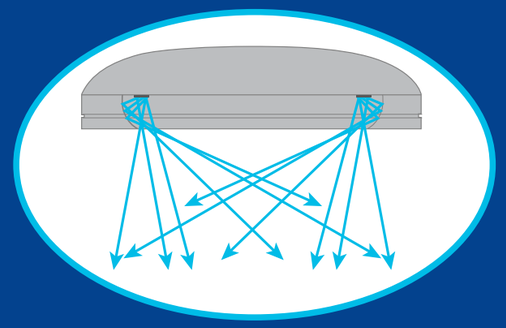

Minimized visibility to LED light source, creating non-pixilated appearance to driver's field of view

Refractive

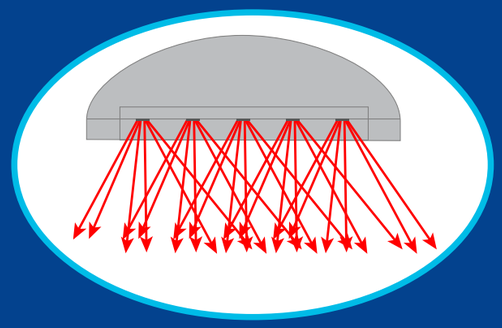

Visibility to every LED, creating a pixilated appearance and increased glare to driver's field of view

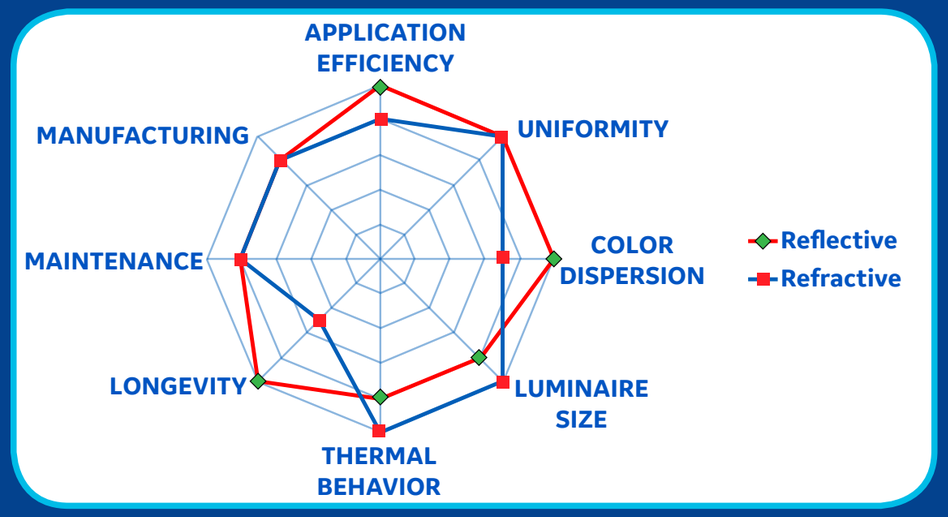

tungsram.com

TUNGSRAM™

Innovation is our heritage
EST. 1896

Outdoor Product Catalogue

February 2019

We in Tungsram Operations Kft. are constantly developing and improving our products. For this reason, all product descriptions in this catalogue are intended as a general guide, and we may change specifications from time to time in the interest of product development, without prior notification or public announcement. All descriptions in this publication present only general particulars of the goods to which they refer and shall not form part of any contract. Data in this guide has been obtained in controlled experimental conditions. However, Tungsram cannot accept any liability arising from the reliance on such data to the extent permitted by law.